About Prontor Self Cocking Shutters

These are discontinued and no longer available

BACK HOME

An "Automatic" shutter is one which operates directly from the cable release or release lever. It is not "cocked" or "set" before making an exposure. This allows rapid repetition of exposures without touching the shutter between shots.

The disadvantage is that more energy is required by the cable release to trigger the operation and in addition this mechanism results in the fastest speed being slower than that acheivable in a "set and release" or ordinary type shutter.

This is analogous to the difference in operating a revolver by pulling the trigger to revolve the cylinder, cock the hammer, and release the firing pin (A fair amount of finger energy is required to do this.) As opposed to cocking the hammer in a separate operation then squeezing the trigger with minimal energy.

(This page is approximatly 200kb to load)

prontor
Zeiss – Gruppe

Prontor-Werk
Alfred Gauthier GmbH
75323 Bad Wildbad-Calmbach

Telefon: (0 70 81) 78 11
Telefax: (0 70 81) 78 14 99

prontor professional System

Operation of Prontor professional shutter follows the self-cocking principle. They can be released without any previous cocking operation. This is of particular advantage when multiple exposures with or without flash are carried out. Release is possible by choice with either release lever **1** or by means of the cable release socket **2** (colour code: red).

For ground glass viewing shutter and diaphragm can be opened in separate steps via the cable release socket **3** (colour code: white).

These two operating steps of releasing and opening are carried out by means of the central remote

The self-cocking shutters system for the professional photographer:

shutters
Prontor professional 01
Prontor professional 1
Prontor professional 3

aperture setting devices 01/1 and 3
time setting devices 01/1 and 3

central remote control unit
automatic cartridge accessory

The shutter speeds of 1/125 to 1 s and B can be read both from the front plate **(4)** and from the top side **(5)** of the shutter. This is true as well for the aperture **(5** and **6)**. The aperture ring has click-stops in marked 1/3-stop increments. The click-stops can be disengaged--if desired--by lever **11**. The scales depend on the mounted lens. The aperture can be set either with the aperture setting handle **7** or with the aperture setting device which is inserted into support **8** and hole **9** of aperture setting handle **7**, By means of this device the aperture can be controlled from the rear of the camera.

The flash connection **10** is well protected and plug connections find firm hold.

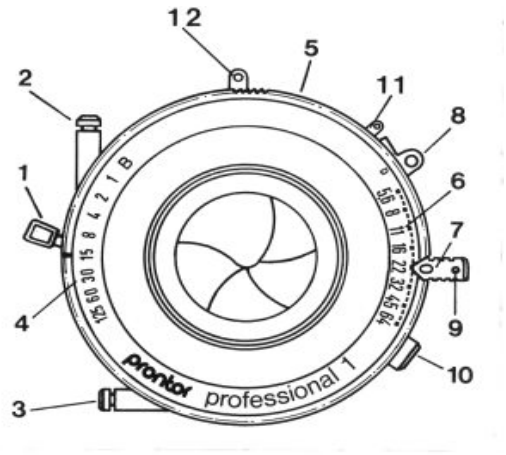

By using the accessory "time setting device", the exposure time can be both set and read from the rear of the camera. The time setting device is attached to the aperture setting device and has a rod which is inserted into connection b>(12) on the shutter speed ring. By adding the automatic cartridge accessory, the central remote control unit can be extended to a cartridge automatic if a camera is equipped with an appropriate connection to a cartridge holder. When inserting a film cartridge the shutter, which is usually open during ground glass viewing, closes automatically. The operature (sic) adapts to the pre-set value.

The Prontor Professional line has several accessories to improve its versatility. The following pictures and product literature explain these.

All currently made #0, #1, and #3 (Copal makes two versions of the #3) are essentially interchangeable. The thread dimensions and mounting hole sizes are as in the table on the previous page (There is also a table specific to the Prontor shutters at the bottom of this page) -- a lens which will fit a Copal #0 shutter will fit a Prontor Professional #01 for example. There may be some inconvenience such as around obtaining the right iris scale but I routinely accomplish these installations.

PRONTOR professional System:

Prontor professional 1 S
with aperture-setting device

Prontor professional 3
with aperture and time-setting devices

The shutters have additional system modules which simplify their operation even further and extend their working range.

Further system modules:

ing the shutters and the remote control unit to open the shutter and aperture, providing maximum brightness when viewing the subject. The two cable connections leading to the shutter are marked by colors. The unit is operated by a jack-switch with the following three switch positions:

shutter ready for release.

shutter opened, aperture set to preselected value for determining depth of field, release prevented.

shutter opened, aperture fully opened to provide optimum brightness when viewing the subject, release prevented.

The settings can be changed as often as desired from the rear of the camera.

There are two versions of the central remote control unit:

Version 1
Ergonomic and functional design of the housing. Integrated professional cable release. The two cables are linked by an adjustable spacer, ensuring reliable connection to the camera at all times. Loop on the housing.

Version 2
This version can be screwed on using a tripod screw, for example to the base tube of the camera. In this case, a separate professional cable release is included in the delivery package.

simplifying operation.
A large scale which extends over the top of the camera front standard permits aperture setting from the rear of the camera.

Automatic cartridge accessory
The central remote control unit can be extended by an automatic cartridge accessory. This accessory is a special cable release for connection of the remote control unit to the cartridge holder of the camera (thread on holder – M 6): when a film cartridge is inserted into the holder, the jack switch on the central remote control unit is reset to its normal position and locked, regardless of its previous position. The diaphragm is set to the preselected aperture. The shutter closes and is ready for release.

setting and reading the shutter speeds from behind the camera.

The easy-to-attach aperture and time-setting devices are clearly arranged and sturdily designed.

In this way, the photographer can remain behind the camera when setting the aperture and the shutter speed, or when opening the shutter and the diaphragm for ground-glass viewing. This gives the photographer more time to concentrate on the subject.

Timer
The Prontor professional timer extends the shutter speed range to 32 s. This fully mechanical device with an ergonomically designed housing requires no batteries and is provided with a large scale with exact divisions in seconds. The release stroke can be adapted to all kinds of photographic equipment. Please see the separate flyer for a picture and further details.

The Numbers:

Prontor Prof	#0	#1	#3
housing dia.	72.8mm	72.8mm	95mm
front thread	M29.5-0.5	M40-0.75	M58-0.75
back thread	M29.5-0.5	M36-0.75	M58-0.75
overall thickness	20 mm	20 mm	31.5 mm
mount thread	M32.5-0.5	M39-0.75	M62-0.75
lensboard hole	34.6 mm	41.6 mm	65 mm
iris dia	24 mm	30 mm	45 mm
price*	****	****	****
Aper. Set Acc	****	****	****
Time Set Acc	****	****	****

Speeds: #0 & #1 1/250 thru 1 sec and "B"
#3 1/125 thru 1 sec and "B"

These are premium quality self cocking shutters. Note that the #0 size is a modification of the #1 size. Accessories are additional price and subject to availability. *These are now discontinued and no longer available

BACK HOME

Direct E-mail link: SK Grimes
or
VOICE: 401-762-0857
FAX: 401-762-0847

E-Mail: skgrimes@skgrimes.com

S.K. GRIMES

Compound Shutters for Large Format Photographers

BACK
HOME

A high quality older model shutter: the German made "COMPOUND"

These Compound shutters were made in **great numbers** and in many different sizes. The main features of their design are the **air piston/cylinder** at the top of the speed dial. and what turns out to be a **quirk of operation** by which the shutter is not cocked when operated on "B" or "T" setting, but operated by only the action of the release lever (or cable release).

On this page watch how one of these is disassembled and take a look at the mechanism. (The picture shows a typical problem of a deranged iris.)

Click on the small pictures to open a new window with a large version of the picture



Removing the **speed dial, cocking lever** and **front cover plate** reveals the very straightforward mechanism. An odd feature of these is that they operate **without cocking** the mechanism on "T" (Z) and "B" (B) settings selected by

Removing the screws at the back of the shutter allows the **mechanism** to be separated from the **body shell** which holds the iris and iris control.

These show further disassembly: The **Air retard piston/cylinder**, the iris leaves (note, they're not symmetrical) and the iris control mechanism showing the axle pins dislodged from their slots.

At this stage of disassembly the parts can be **inspected and cleaned** using a petroleum solvent and/or detergent and water. **The paper iris blades must be treated carefully**. They are then dried and are ready to be lubricated sparingly (where appropriate) and reassembled.

Re-assembling the iris is a tricky business of stacking the blades around and tucking them under to their blind holes. On this one they are made of an easily damaged paper material. The travel of the air-piston is limited by the M **cam** under the speed dial whose position relates to the shutter speed.

The mechanism can be fully assembled and trial operated for inspection and adjustment without the iris scale cover.

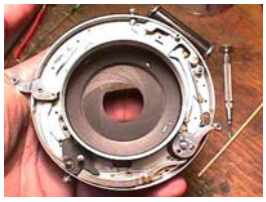

Click here to *hear* the sound of the repaired mechanism in good order

These well made shutters suffer a poor reputation for two reasons that have nothing to do with their excellent design:

First, their odd operating ergonomics require that the cocking lever not be used when the shutter is set to the "B" or "T" functions. Forcing the cocking lever (and thereby damaging the mechanism) happens frequently when these are up for inspection at buy/sell shows or in the hands of uninstructed assistants or other users.

Secondly, they respond very poorly to the "dip in solvent and blast with compressed air" method of amateur repair. The paper product iris on this example would surely be damaged beyond repair by such treatment. They are regarded as "fussy" and, once tampered with sufficiently are, indeed, often impossible to repair.

I hope that anyone observing this page would allow for the possibility that these shutters, properly used are an excellent product.

(We also refurbish all these shutters. Contact me via phone or E-mail -- The E-Mail link at the bottom of this page will summon your own blank E-mail automatically addressed to me for your convenience.)

EXPERTISE
PROFESSIONAL RELIABILITY
TIMELINESS

S.K. GRIMES

Compur Shutters

BACK
HOME

Compur shutters were the world standard for high quality large format lenses.

Brochure from the "golden age" of Production.

The Compur shutters are still in widespread use. The most popular sizes are #0 and #1. Scroll down this page for a table of sizes. The earliest versions have three blades which open and close to deliver the exposure. The vast majority of these are #0 and #1 size, although there are a few #00 size. Most have no flash synch; these are obsolete, as a practical matter. However since they are of the usual rimset design they look similar to the later versions.

Later versions are called "Synchro Compur" or, in the case of the non flash version "Compur Rapid" and have five blades. These are also common in the tiny #00 size as well as the #0 and #1 . Like the earlier models they use the tension type mainspring. The larger one in the picture is a special version of the same shutter made for Linhof.

The latest version of the Synchro Compur began production in the early 1970's and is still in limited production. It has a new design torsion type mainspring and was originally available in

electronic versions don't work. Battery vendors for the PX 21 can be found via a Google search..

In addition to the usual #00, #0, #1 and #3 sizes there is an elusive size referred to by default as #2. There are variants and versions that make this a difficult size. These are usually four bladed shutters and exist in both dial set and later as rim set versions. They work more like the Compound shutters but are called Compur and were made thru the late sixties. This size (and the #00 size) is no longer available and replacement with new shutters is a problem. Repair of these an option which must be considered. #0, #1 and #3 sizes are readily replaced with new shutters, so the option of replace instead of repair is available.

The Compur shutters are nicely made and well designed. They make use of more machined parts and fewer die stampings and therefore were more expensive to make and sell and have a reputation for high quality.

The latest versions are perfect in operation and if it were not for their very high price would be popular. The earlier versions are OK but their performance does not equal their current Japanese made replacements.

THREADS COMPUR DIMENSIONS

Dimensions in Millimeters	#00	#0	#1	#2*	#3
body Ø	45.2	58	70.5	80.5	*****
front lens thread	M22.9-0.5	M29.5-0.5	M40-0.75	M45.75-0.75	M58-0.75
back lens thread	M22.9-0.5	M29.5-0.5	M36-0.75	M45.75-0.75	M58-0.75
overall thickness	16.0	20.0	20	26.75	26.75
front to iris	9.3	10.2	10.75	14.5	31.5
mount flange thread	M25.0-0.5	M32.5-0.5	M39-0.75	M50-0.9	M62-0.75
lensboard hole Ø	26.3	34.6	41.6	52.5	65
iris Ø (Max)	17.4	24	30	35	*****

* This is a representative version of one of at least half a dozen oddball sizes that are similar but not interchangeable. Ole Tjugen has also identified verisons which untilize a 50mm and 55.8mm lens board hole Ø.

Scroll down to see internal links to a number of next pages which I developed to answer specific questions and address quirks of operation.

(Click on the words in the yellow boxes at the right to see more.)

- Operation of the two styles of **#0 Compur**. *("This shutter has no "press focus"")* **Compur "P"**

How to Measure Screw Threads

[BACK]

What size should I order, How do I know it will fit?. There are many cases where accurate measuring of a diameter or a thread will solve a problem. How to measure and identify a thread. There are two systems in use today, The **English** and **Metric**. Most foreign made lenses and shutters produced after 1945 use the Metric system of threads and measurement. A **metric** screw thread is specified by **how far, in millimeters it advances in one turn of the screw**. For example, if one turn of a filter brings it 1 mm closer to the lens then it is called "M1.0". It is the distance from one peak of the thread to the next one. This number is referred to as "The Pitch"

The most popular metric threads are: **M.5, M.75, M.9, M1.0, M 1.25**. The usual filter thread in medium size filters is M.75.

English threads are specified by **how many peaks there are in one inch** of the length. They are specified as "Threads per inch" written "TPI" The diameter is specified in "thousandths of an inch" The most popular English threads are: **48 TPI, 40, 36, 32, 30, and 24 TPI**

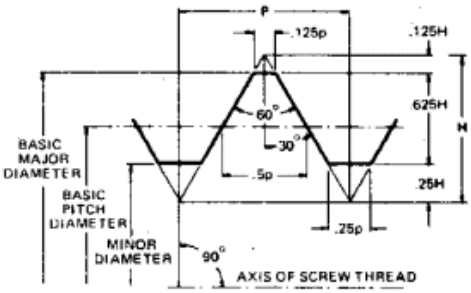

Threads are specified to the outside diameter of a male thread (The "Major Diameter") So, if you measure an outside (male) thread with a caliper and it comes up "57.85mm" then it is a 58mm thread and, if its a filter, its almost certainly M.75. This is specified: "M-58 X 0.75" In the case of filter threads the ".75" part is often left off and it is called "A fifty eight millimeter thread"

To identify an inside thread (such as a filter ring on a lens) first take your best guess from age and origin to determine if its a metric thread then measure the diameter of the female (inside) thread. (The "Minor Diameter") Then add the pitch number to the measurement. For example if the inside measures 57.2mm add the M .75 to get 57.95 which means "58mm"

In the English system thousandths of an inch are used: Such as the mounting thread of a #4 Ilex shutter : "2.495-30" is the way this is specified (and its probably intended to be "Two and a Half by Thirty") The inside diameter is read by measuinrg the inside diameter, in this case 2.465" and adding the corresponding metric pitch number _In this case .9mm or 0.035" So the inside of the flange measures 2.465", add .035 (for the english approximation of the thread pitch) to get 2.5-30 for the specification.

The thread pitch can be gotten by using guages or by using known screws as guages (even if they are different diameters) Hold the known screw agains the one to be measured to see if it fits. A

made to English specification for the American Market.

Although English and Metric threads are not interchangeable, for the purposes of identification they correspond M-.5 : (48tpi) M-.75: 32TPI M-.9 (30tpi) M-1.0: 24tpi. (These are not necessarily the closest English equivalents but the closest commonly used English threads.) Metric bashers refer, for example, to an M6-1.25 as "A Metric Quarter-Twenty".

In the case of Photo equipment it is most unlikely that you will ever find a thread other than the eleven mentioned here. So the goal of your thread measurement is to find out which of these you have on hand.

[BACK]

S.K. GRIMES

BACK
HOME

Ilex Shutters for Large Format Photographers

The most numerous older view camera shutters are the ILEX brand.

A 1948 Pop Photo Ad

Click
to Enlarge

Then click on the
"close" ("X") button
of your browser
to return here.

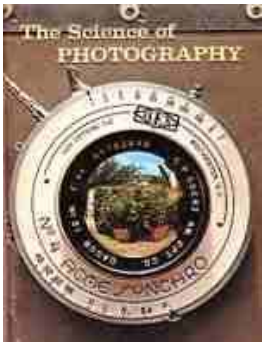

T he Ilex shutters were a product of the American optical industry located in Rochester, New York. There are numerous versions produced over fifty years of industry. They are in abundant supply and still widely used today.

This picture is of a 1962 school science pamphlet cover featuring a typical factory installation of a 12" Goerz Dagor lens.

This is an ordinary Ilex #3 "Rim Set" shutter. The shutter speed is selected by turning the knurled rim anywhere on the outer circumference . Click on the picture to see an enlarged version with the various parts labeled.

The set and release type "Synchro" models have a complicated set and release type delay mechanism for use with flash bulbs. Since a flash bulb requires some time to become illuminated shutters intended for pre-electronic flash require a method to trip the flash before the shutter is opened. The numbers indicate the milliseconds that the

are required when using flash: one to set the shutter itself and the other to set the flash synchronizer. This must be done even at the "0" setting. (Click on the picture for an enlarged 17kb view in a new window. Click your browser close button to return here)

When is an Ilex not an Ilex? Shutters marked as "Made for Eastman Kodak", like this one are often made to different dimensions from the standard production runs. This means that lenses and mounting flanges *may not* be easily interchangeable between different shutters. Scroll down the page or click here to see a table of usual dimensions for Ilex shutters.

The Ilex is one of the most "American" of products. It's simple design uses mostly stamped metal parts. Although stamped metal parts have a reputation of being "cheap" this method of mass production requires a rare mastery in the design and fabrication of the tooling for the original parts.

The $2.00 windup alarm clock of which the Ilexes are reminiscent is only that cheap because millions of them were made. The tooling and technology to make a reliable cheap mechanism is very sophisticated.

Even taking this into account, the Ilex company came up with at least one real dog of a model: The Dial set version illustrated below on the left, is a lookalike for a more expensive German made shutter. They rarely work at all and reliable operation is nearly impossible. These should be avoided. (Other Black finished models are virtually the same as the usual, reliable, silvery colored ones)

"DIAL SET" "RIM SET"

To appreciate the reliability of the Ilex shutter line its best to realize that they were designed to be accurate to within one stop. In addition, the stamped metal parts provide no particular sophistication for adjustment depending on the skill and experience of the mechanic to clean, file, bend and tweak to obtain the best performance and then leave well enough alone. If tenth of a stop accuracy is required the Ilex shutter should be replaced with a new Copal or Compur shutter of most recent design.

THREADS ILEX DIMENSIONS

	#3	#3 (dialset)	#4	#4 (dialset)	#5
overall Ø	3.375"	3.070"	4.025"	3.825"	5.20"
lens thread	1.775-48	1.785-48	2.340-40	2.360-40	2.988-30
overall thickness	1.025"	0.828"	1.060"	0.866"	1.060"
front to iris	0.566"	0.415"	0.623"	0.458"	0.614"
mount flange thread	1.915-40	1.915-40	2.500-30	2.500-30	3.225-30
lensboard hole Ø	1.985"	1.985"	2.604"	2.604"	3.365"
iris Ø (Max)	1.362"	1.375"	1.730"	1.741"	2.525"

"Ø" means "diameter"

- How to measure screw threads. Some hints about thread measurement---- > **Thread Measurement**
- Scroll back up to "Kodak" ---------- > **Back to Kodak/Ilex**

(We also repair all these shutters. Contact me via phone or E-mail -- The E-Mail link at the bottom of this page will summon your own blank E-mail automatically addressed to me for your convenience.)

BACK HOME

Phone: 401-762-0857--Contact Us--Shipping address : 32 Mechanic Ave, Unit 222, Woonsocket RI 02895 USA--Fax: 401-762-0847

skgrimes.com

Operation of Compur #1 Shutters « SKGrimes

Operation of Compur #1 Shutters

Compur # 1

The five blade Synchro Compur #1 is probably the most numerous of all the Compur shutters. It features shutter speeds from 1/400 Second to One second as well as “B” and “T” Speeds are selected by turning the knurled outside speed dial. There is an additional spring engaged when setting the shutter to 1/400 second. This takes a fair amount of force to turn to 1/400 second and may be very difficult to set to the highest speed with the shutter cocked. This is normal operation.

The Synchro Compur # 1 has both the self timer and press focus.

The #1 shutter has both self timer and press focus. The square stamped lever/button can be used to open the blades when the shutter is cocked. The round button to the right operates the self timer. (Set the cocking lever then push the button, this allows the cocking lever to move a little more and engage the self timer. above. The two controls operate independently of one another. The blades should open when the press focus lever is pushed in and close crisply when the lever is pulled back out. It is a common fault/defect that the blades stick open and do not snap shut when the lever is pulled back out. Even in the case of defect, the blades will usually close if the shutter release is operated.

The #1 shutters take lenses mostly of 200mm and longer and were used exclusively on cameras with view backs or at least cameras which could accept an accessory view back.

S.K. GRIMES

Services for the Large Format Photographer

BACK HOME

New Copal Shutters

(Scroll down this page)

New Copal Press Shutters

Click here

COPAL & COPAL PRESS SHUTTERS
IN STOCK FOR IMMEDIATE SHIPMENT

Copal Brand shutters have been made in their current version by Copal Co, Tokyo, Japan for about fifteen years. Supplied with all new view camera lenses made today, they are simple, reliable, and economical.

The performance and price of Copal shutters is such that they are often a practical improvement over restoration or repair of obsolete or worn equipment. Many lenses will fit directly from their old shutters to new, needing only the appropriate iris scale and mounting to the lensboard.

We routinely complete changeovers to new shutters, mounted to your lensboard and ready to use.

To view a set of drawings of the shutters listed, click below and use scroll bars to see the whole image:

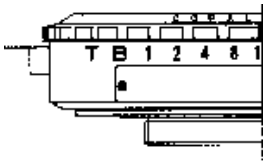

Copal #0 shutter click *once* here
Copal #1 shutter click *once* here
Copal #3S shutter click *once* here

These drawings are from the original instruction sheets.

Copal Dimensions and Specs

COPAL spec.	#0	#1	#3	#3s
front thread	M29.5-0.5	M40-0.75	M58-0.75	M56-0.75
back thread	M29.5-0.5	M36-0.75	M58-0.75	M56-0.75
overall thickness	20 mm	20 mm	32 mm	28.6 mm
front to iris	10.2 mm	10.75 mm	17.7 mm	16.25 mm

iris dia	24 mm	30 mm	45 mm	45 mm
price*	$275.00	$325.00	$550.00	$550.00

*These prices are for out right purchase price.

All items (shutters, retainers, iris scales,) are priced separately.

Lenses which need machine work to remount (such as lenses in barrel or in non-compatible old shutters) usually cost an additional $225.00 - $350.00to install.

We am familiar with all versions, sizes and variations of these shutters. We can repair or replace any of them. If you have or suspect any compatibility problems call me to discuss.

BACK HOME

Phone: 401-762-0857--Contact Us--Shipping address :32 Mechanic Ave, Unit 222, Woonsocket RI 02895 USA--Fax: 401-762-0847