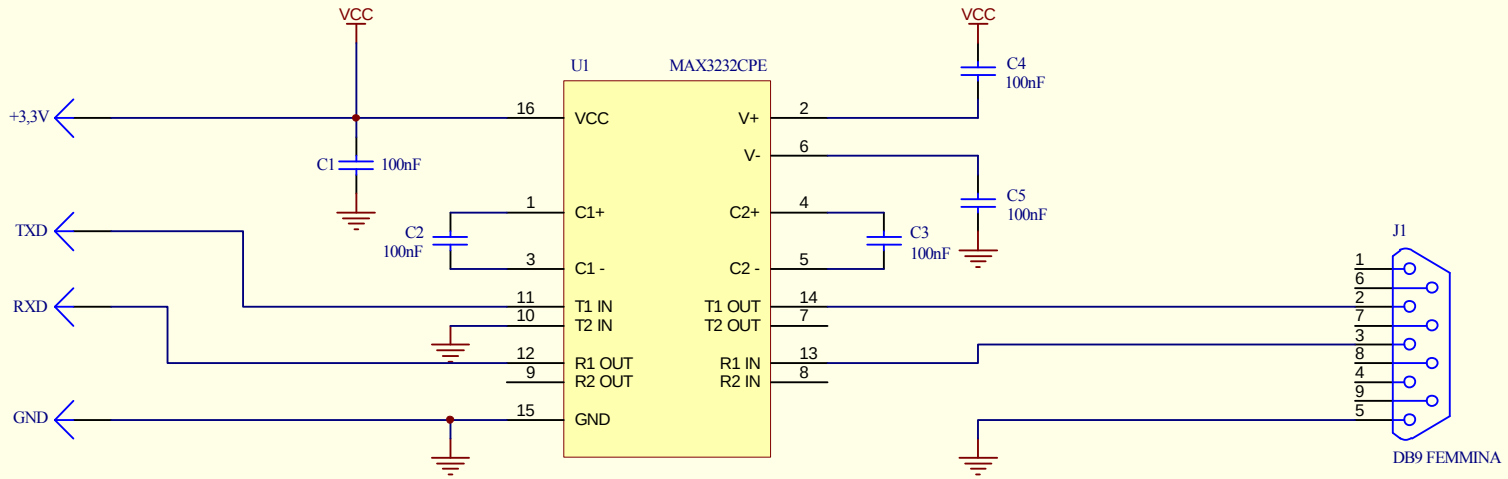
VCC
VCC
U1
MAX3232CPE
C4
100nF
+3,3V
16
VCC
V+
2
V-
6
C1
100nF
C5
100nF
1
C1+
C2+
4
TXD
C2
100nF
C3
100nF
3
C1 -
C2 -
5
J1
RXD
11
T1 IN
T1 OUT
14
10
T2 IN
T2 OUT
7
12
R1 OUT
R1 IN
13
9
R2 OUT
R2 IN
8
GND
15
GND
DB9 FEMMINA