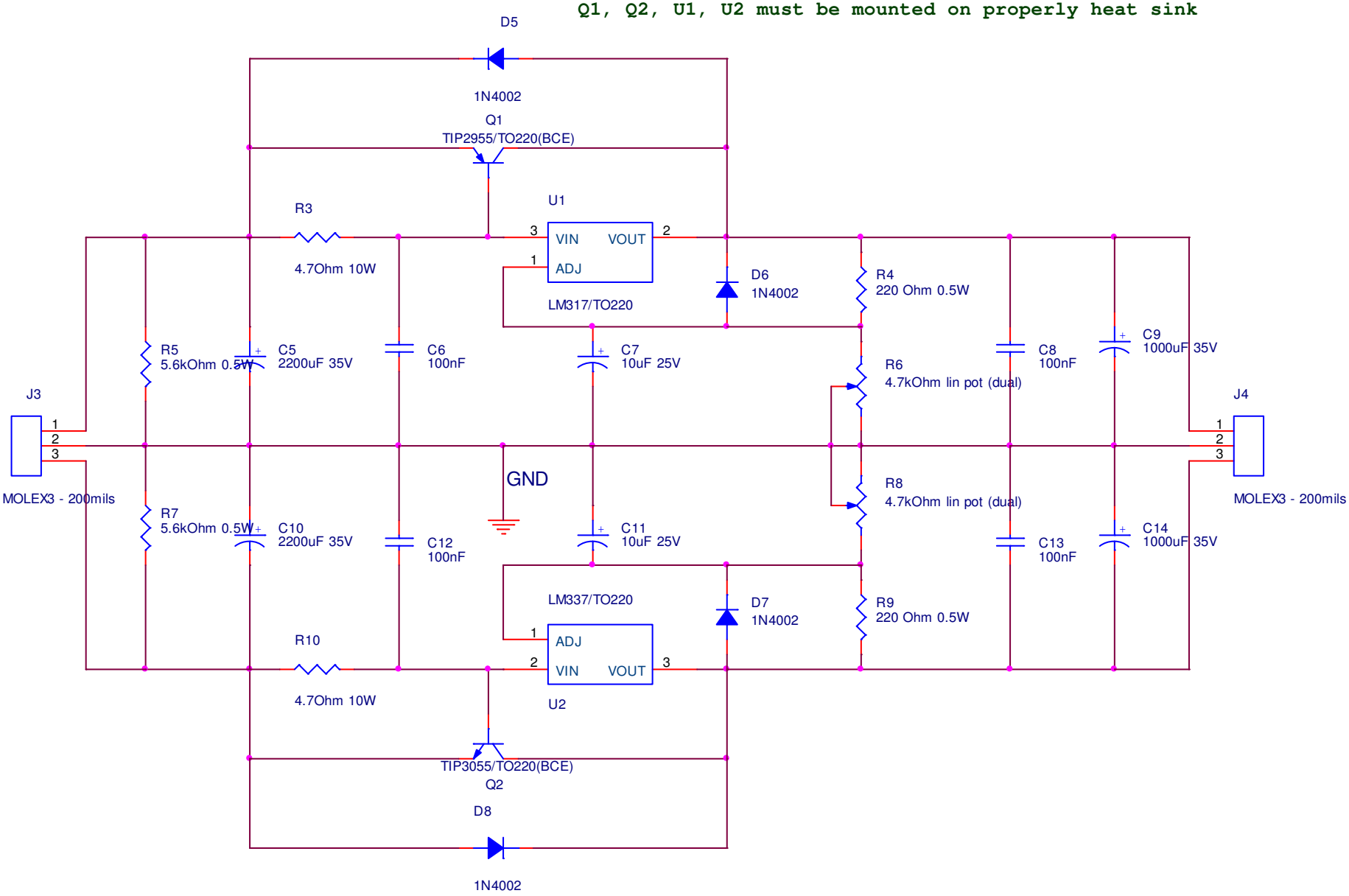Q1, Q2, U1, U2 must be mounted on properly heat sink